SHAN HUA PLASTIC INDUSTRIAL

SHPI

TRIED
TESTED
& WANTED

DAFTAR PRODUK

PROLOG:

SHPI memiliki standar kualitas yang tinggi karena proses manufaktur yang melibatkan penggunaan produksi dan peralatan inspeksi terdepan. Produk ini telah diuji dalam tiap tahap selama proses produksi. Hal itu diakui merupakan upaya SHPI dalam meraih dan mempertahankan kualitas terbaik, SHPI pun telah dianugerahi sertifikat ISO 9001 sejak Januari 2001.

1 POLYURETHANE TUBE — **98A Polyurethane Tube**

2 POLYURETHANE BRAID TUBE — **85 A Polyurethane Braid Tube**

3 NYLON 6 TUBE — PA6 Metric & Inch Nylon Tubing

4 POLYETHYLENE TUBE LOW DENSITY — Polyethylene Tube Low Density

5 POLYURETHANE RECOIL HOSE — **Polyurethane Re-Coil Hose 98A**

6 ARTICULATED VEHICLE BRAKE — **Articulated Vehicle Brake Re-Coil Tube**

7 PAINT HOSE — **Paint Single Hose**

8 ONE TOUCH FITTING — **PC, PL, PT, PST, PWT, PUC, PUT, PG, PUL, PY, PW, PCF, PMM**

9 SPEED CONTROL — **SC, SCF**

10 SPRING DRIVEN HOSE REEL — **HR01 Series**

11 MANUAL DRIVEN HOSE REEL — **HR02 Series**

98A_POLYURETHANE TUBE

Series
US98A Ester Base, Shore A 85±2

Perkiraan Suhu
- 40°C - 70°C

Toleransi
3mm ~ 8mm OD/±0.1mm
10mm~12mm OD/± 0.15
16mm ~ 18 mm OD/±0.2
± 0.5% dari berat

Tekanan Pekerjaan
3 sampai 1 faktor keselamatan
tekanan optimal pada suhu tinggi

Warna Standar
BU . Biru / **BK.** Hitam / **C.** Bening
GY. Abu-abu / **G.** Hijau / **OR.** Jingga
R. Merah / **Y.** Kuning

UKURAN METRIKS

NOMOR PART	DIAMETER LUAR (MM)	DIAMETER DALAM (MM)	KETEBALAN DINDING (MM)	PANJANG KEMASAN (MM)	TEKANAN PEKERJAAN PADA 23°C (KG/CM)	TEKANAN LEDAKAN PADA 23°C (KG/CM)	RADIUS KELENTURAN (MM)	BERAT PER 100M (KG)
US98A3018	3.0	1.8	0.60	30,50,100	12	36	15	0.56
US98A4020	4.0	2.0	1.0	30,50,100	25	75	20	1.16
US98A4025	4.0	2.5	0.75	30,50,100	12	36	20	0.99
US98A5030	5.0	3.0	1.0	30,50,100	13	39	22	1.54
US98A6040	6.0	4.0	1.0	30,50,100	11	33	25	1.93
US98A8050	8.0	5.0	1.50	30,50,100	12	36	30	3.77
US98A8055	8.0	5.5	1.25	30,50,100	9	27	35	3.26
US98A8060	8.0	6.0	1.0	30,50,100	8	24	35	2.7
US98A1065	10.0	6.5	1.75	30,50,100	10	30	35	5.58
US98A1070	10.0	7.0	1.5	30,50,100	9	27	40	4.92
US98A1075	10.0	7.5	1.25	30,50,100	8	24	40	4.22
US98A1080	10.0	8.0	1.0	30,50,100	5.5	16.5	50	3.48
US98A1280	12.0	8.0	2.0	30,50,100	10	30	40	7.72
US98A1290	12.0	9.0	1.5	30,50,100	8	24	45	6.08
US98A1611	16.0	11.0	2.5	30,50,100	10	30	60	13
US98A1612	16.0	12.0	2.0	30,50,100	9	27	70	10.81
US98A1813	18.0	13.0	2.5	30,50,100	6.5	19.5	80	14.97

ESTER BASE_85A_POLYURETHANE BRAID TUBE

Series
UBS85A Ester Base, Shore A 85 ±2

Perkiraan Suhu
- 40°C - 60°C
- 40°F - 140°F

Tekanan Pekerjaan
4 sampai 1 faktor keselamatan
tekanan optimal pada suhu tinggi

Warna Standar
BU . Biru / **BK.** Hitam / **C.** Bening
OR. Jingga / **R.** Merah / **Y.** Kuning
CB. Biru Transparan / **CY.** Kuning Transparan

UKURAN METRIKS

NOMOR PART	DIAMETER DALAM (MM)	DIAMETER LUAR (MM)	TEKANAN PEKERJAAN PADA 23°C (KG/CM²)	TEKANAN LEDAKAN PADA 23°C (KG/CM²)	PANJANG KEMASAN (M)
UBS85A5080	5.0	8.0	15	60	7.5, 15, 20, 30, 50, 100
UBS85A6510	6.5	10.0	15	60	7.5, 15, 20, 30, 50, 100
UBS85A8012	8.0	12.0	15	60	7.5, 15, 20, 30, 50, 100
UBS85A85125	8.5	12.5	15	60	7.5, 15, 20, 30, 50, 100
UBS85A1015	10.0	15.0	15	60	7.5, 15, 20, 30, 50, 100
UBS85A1116	11.0	16.0	15	60	7.5, 15, 20, 30, 50, 100
UBS85A1318	13.0	19.0	15	60	7.5, 15, 20, 30, 50, 100

UKURAN INCH

NOMOR PART	DIAMETER DALAM (MM)	DIAMETER LUAR (MM)	TEKANAN PEKERJAAN PADA 23°C (KG/CM²)	TEKANAN LEDAKAN PADA 23°C (KG/CM²)	PANJANG KEMASAN (M)
UBS85A14375	1/4	.375	200	800	25, 50, 100, 300
UBS85A38562	3/8	.562	200	800	25, 50, 100, 300
UBS85A12732	1/2v	.732	200	800	25, 50, 100, 300

NYLON 6 TUBE

Nilon 6 memiliki kualitas yang sangat baik bila dibandingkan dengan bahan lainnya. Produk tersebut juga sangat bersaing dibandingkan dengan jenis lain yang juga dari nilon. Produk ini harganya yang bersaing dan kualitas terbaik yang di hasilkan oleh 6 nilon. Membuat nya menjadi salah satu yang paling di cari oleh konsumen.

Seri
N6 Polyamide 6

Perkiraan Suhu
- 40°C ~ 80°C
- 14°F ~ 176°F

Toleransi
4mm ~ 12mm OD/±0.1mm
14mm~18mm OD/± 0.15mm
± 0.5% dari berat

Tekanan Pekerjaan
4 sampai 1 faktor keselamatan tekanan optimal pada suhu tinggi

Warna Standar
BU . Biru / **BK.** Hitam / **NA.** Natural
G. Green / **OR.** Jingga / **R.** Merah / **Y.** Kuning

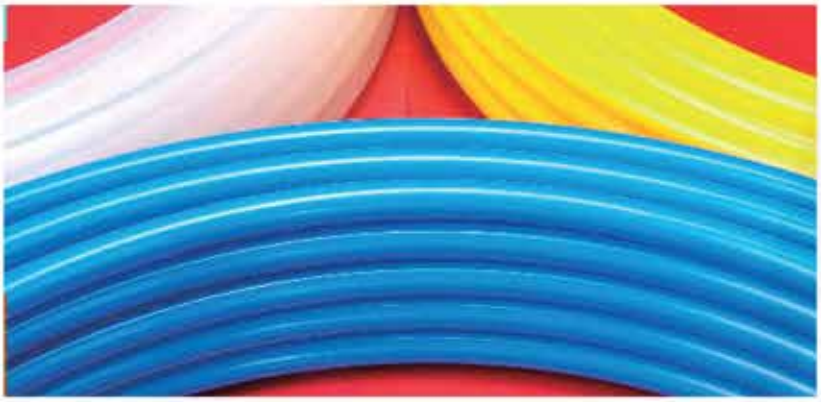

UKURAN METRIKS

NOMOR PART	DIAMETER LUAR (MM)	DIAMETER DALAM (MM)	KETEBALAN DINDING (MM)	PANJANG KEMASAN (MM)	TEKANAN PEKERJAAN PADA 23°C (KG/CM²)	TEKANAN LEDAKAN PADA 23°C (KG/CM²)	RADIUS KELENTURAN (MM)	BERAT PER 100M (KG)
N64025	4.0	2.5	.75	100, 200, 300	28	112	22	0.88
N66040	6.0	4.0	1.00	100, 200, 300	25	100	44	1.81
N68055	8.0	5.5	1.25	100, 200, 300	24	96	55	3.05
N68060	8.0	6.0	1.00	100, 200, 300	18	72	66	2.53
N61070	10.0	7.0	1.5	100, 200	22	88	69	4.6
N61075	10.0	7.5	1.25	100, 200	18	72	76	3.95
N61080	10.0	8.0	2	100, 200	14	56	88	3.25
N61290	12.0	9.0	1.5	100, 200	18	72	96	5.69
N61210	12.0	10.0	1.00	100, 200	11	44	80	3.97
N61411	14.0	11.0	1.50	100, 200	14	56	96	6.77
N61613	16.0	13.0	1.50	50, 100	14	56	104	7.85
N61815	18.0	15.0	1.50	50, 100	12	48	132	8.94

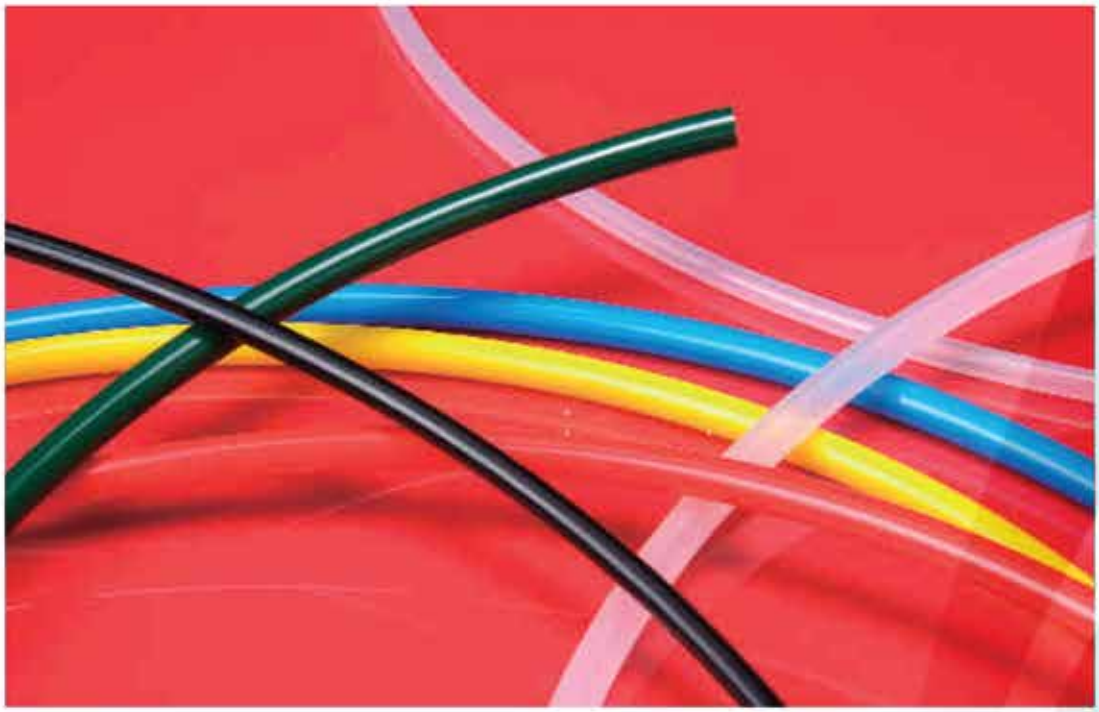

UKURAN INCH

NOMOR PART	DIAMETER LUAR (INCH)	DIAMETER DALAM (INCH)	KETEBALAN DINDING (INCH)	PANJANG KEMASAN (FT)	TEKANAN PEKERJAAN PADA 23 C (PSI)	TEKANAN LEDAKAN PADA 23 C (PSI)	RADIUS KELENTURAN (INCH)	BERAT PER 100M (IBS)
N618080	1/8	.080	.022	300, 600, 1000	330	1320	1/2	.36
N618093	1/8	.093	.016	300, 600, 1000	270	1080	3/8	.27
N6532106	5/32	.106	.025	300, 600, 1000	300	1200	1/2	.49
N6316118	3/16	.118	.035	300, 600, 1000	400	1600	5/8	.83
N6316138	3/16	.138	.025	300, 600, 1000	270	1080	3/4	.60
N614125	1/4	.125	.062	300, 600, 1000	420	1680	7/8	1.83
N614170	1/4	.170	.040	300, 600, 1000	310	1240	1	1.32
N614180	1/4	.180	.035	300, 600, 1000	290	1160	1-1/4	1.17
N6516232	5/16	.232	.040	300, 600, 1000	265	1060	1-3/4	1.65
N638275	3/8	.275	.050	300	265	1060	2	2.46
N612375	1/2	.375	.062	300	240	960	3	4.24
N658500	5/8	.500	.062	300	170	680	4	5.50

POLYETHYLENE TUBE LOW DENSITY

Seri
ELD Polyethylene

Perkiraan Suhu
- 10°C ~ 60°C
- 14°F ~ 140°F

Toleransi
OD 0.1mm
±0.5% on the weight

Tekanan Pekerjaan
4 sampai 1 faktor keselamatan tekanan optimal pada suhu tinggi

Warna Standar
BU . Biru / **BK.** Hitam / **NA.** Natural
G. Green / **OR.** Jingga / **R.** Merah / **Y.** Kuning

UKURAN METRIKS

NOMOR PART	DIAMETER LUAR (MM)	DIAMETER DALAM (MM)	KETEBALAN DINDING (MM)	PANJANG KEMASAN (MM)	TEKANAN PEKERJAAN PADA 23 C (KG/CM)	TEKANAN LEDAKAN PADA 23 C (KG/CM)	RADIUS KELENTURAN (MM)	BERAT PER 100M (KG)
ELD4025	4.0	.2.5	75	100, 200, 300	9	36	21	0.71
ELD6040	6.0	4.0	1.00	100, 200, 300	9	36	32	1.46
ELD8060	80	6.0	1.00	100, 200, 300	6	24	38	2.04
ELD1075	10.0	7.5	1.25	100, 200	7	28	47	3.19
ELD1080	10.0	8.0	1.00	100, 200	4	16	47	2.63
ELD1290	12.0	9.0	1.50	100, 200	7	28	63.5	4.6
ELD1210	12.0	10	1.00	100, 200	3.5	14	63.5	3.21

UKURAN INCH

NOMOR PART	DIAMETER LUAR (MM)	DIAMETER DALAM (MM)	KETEBALAN DINDING (MM)	PANJANG KEMASAN (MM)	TEKANAN PEKERJAAN PADA 23 C (KG/CM)	TEKANAN LEDAKAN PADA 23 C (KG/CM)	RADIUS KELENTURAN (MM)	BERAT PER 100M (KG)
ELD18062	1/8	.062	.031	300, 600, 1000	100	600	1/2	.37
ELD316117	3/16	.117	.035	300, 600, 1000	125	500	5/8	.68
ELD14170	1/4	.170	.039	300, 600, 1000	125	500	3/4	1.29
ELD516212	5/16	.212	.050	300, 600, 1000	125	500	1	2.04
ELD38250	3/8	.250	.062	300, 600	125	500	1-1/2	3.01
ELD12375	1/2	.375	.062	300, 600	100	400	1-3/4	4.24
ELD58500	5/8	.500	.062	300	70	280	2-1/2	5.45

POLYURETHANE RE- COIL HOSE 98A

Seri
UCS 98A Plyurethane Ester base.
Shore A 98±2

Perkiraan Suhu
- 20°C ~ 70 C°/ -4°F ~ 158°F

Panjang Area Kerja
80 % ~ 90 % of panjang material

Tekanan Pekerjaan
3 sampai 1 faktor keselamatan
tekanan optimal pada suhu tinggi

Warna Standar
BU . Biru / **OR.** Jingga / **R.** Merah / **Y.** Kuning

UKURAN METRIKS

NOMOR PART	DIAMETER LUAR (MM)	DIAMETER DALAM (MM)	TEKANAN PEKERJAAN PADA 23°C (KG/CM²)	TEKANAN LEDAKAN PADA 23°C (KG/CM²)	GULUNGAN DIAMETER DALAM (MM)	PANJANG MATERIAL (M)
UCS98A80505	8.0	5.0	12	36	22 or 35	5
UCS98A80508	8.0	5.0	12	36	22 or 35	8
UCS98A805012	8.0	5.0	12	36	38	12
UCS98A805015	8.0	5.0	12	36	38	15
UCS98A10656	10.0	6.5	9	27	50	6
UCS98A10658	10.0	6.5	9	27	50	8
UCS98A106510	10.0	6.5	9	27	50	10
UCS98A106512	10.0	6.5	9	27	50	12
UCS98A12806	12.0	8.0	10	30	60	6
UCS98A12808	12.0	8.0	10	30	60	8
UCS98A128010	12.0	8.0	10	30	60	10
UCS98A128012	12.0	8.0	10	30	60	12

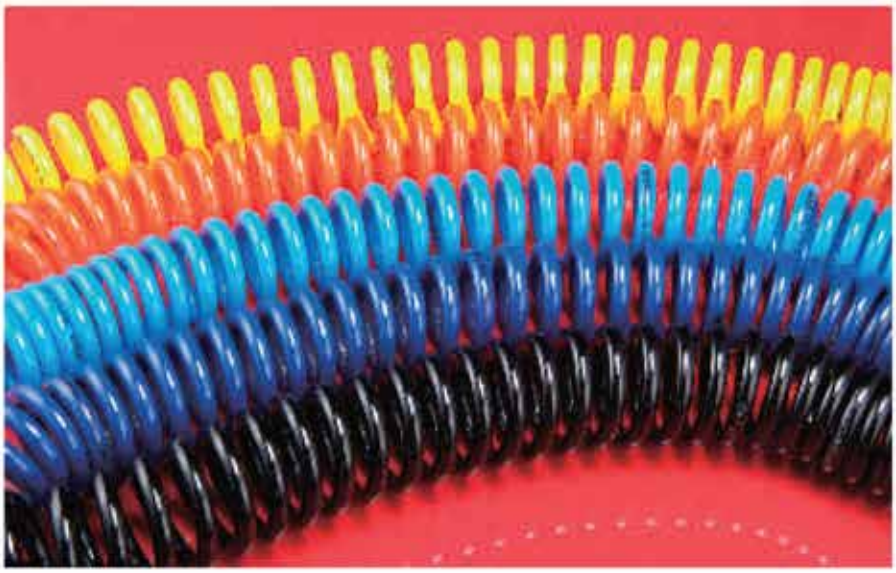

ARTICULATED VEHICLE BRAKE RECOIL TUBE

Produk diproduksi menggunakan standar DIN 73378 & 7432
untuk kegunaaan pada sistem rem angin dan gulungan tubing

Series
DINC

Applikasi
menyambungka koneksi sistem rem angin pada trailer dan truk

Fitur
- terbuat dari plastik virgin nylon 12
- daya tahan tinggi terhadap cairan dan kelembaban
- Tahan terhadap xat kimia.
- fleKsibel dan tidak mudah kusut
- pengembali gulungan kualitas terbaik

Warna Standar

BU . Biru	Saluran Darurat Emergency Truk/Trailer
R. Merah	Saluran Servis Trailer/Truk
Y. Kuning	Sistem rem angin trailer

DIN 74323

NOMOR PART	JUMLAH GULUNGAN	DIAMETER LUAR (MM)	DIAMETER DALAM (MM)	GULUNGAN DALAM (MM)	PANJANG OPERASIONAL (M)	PANJANG KESELURUHAN (MM)	END FITTING
DINC1616	16	12	9	76	3.35	100	M16*1.5
DINC1618	16	12	9	76	3.35	100	M18*1.5
DINC1622	16	12	9	76	3.35	100	M22*1.5
DINC1612	16	12	9	76	3.35	100	BSP*1/2"
DINC1816	18	12	9	76	3.75	100	M16*1.5
DINC1818	18	12	9	76	3.75	100	M18*1.5
DINC1822	18	12	9	76	3.75	100	M22*1.5
DINC1812	18	12	9	76	3.75	100	BSP1/2"
DINC2216	22	12	9	76	4.55	100	M16*1.5
DINC2218	22	12	9	76	4.55	100	M18*1.5
DINC2222	22	12	9	76	4.55	100	M22*1.5
DINC2212	22	12	9	76	4.55	100	BSP1/2"

PAINT SINGLE HOSE

Seri
UNS Single Hose

Perkiraan Suhu
- 40 C ~ 70 C / -40 F ~ 158 F

Tekanan Pekerjaan
4 sampai 1 faktor keselamatan
tekanan optimal pada suhu tinggi

Material
Inner / Nylon 12
Outer / Polyurethane

Warna Standar
NA . Natural

UKURAN METRIKS

NOMOR PART	DIAMETER LUAR SELANG (MM)	DIAMETER DALAM SELANG (MM)	DAYA TEKANAN PADA 23°C (KG/CM²)	TEKANAN LEDAKAN PADA 23°C (KG/CM²)	PANJANG MATERIAL (M)
UNS75105	10.5	7.5	7	28	50.100

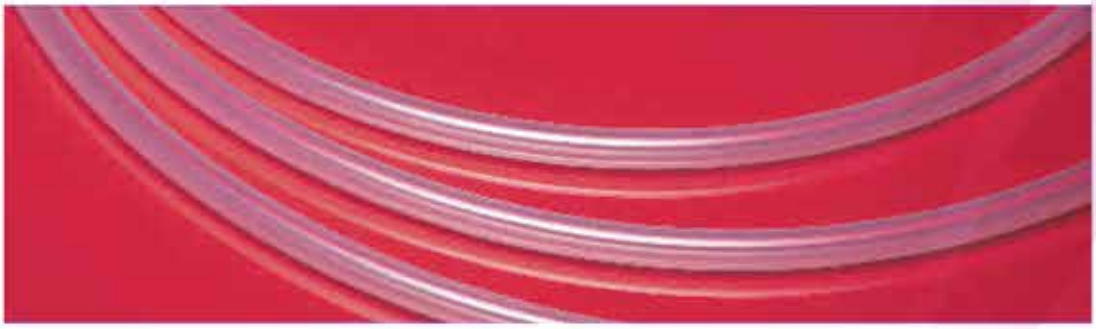

PC male straight

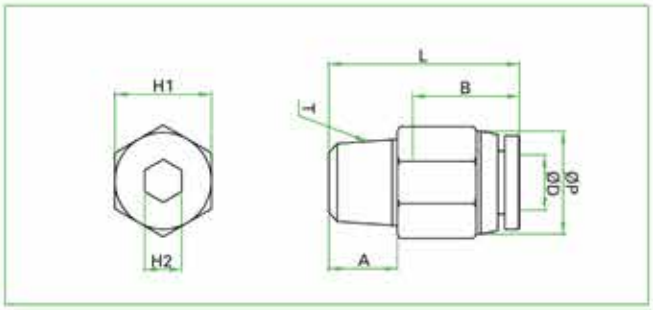

MODEL	ØD	T (Thread)	L	A	B	H1	H2	ØP	ORIFICE
PC-04-01	4	PT1/8	20.3	8	15	10	3	10	3
PC-04-02	4	PT1/4	18.4	10	15	14	3	10	3
PC-04-03	4	PT3/8	19	11	15	17	4	10	3
PC-04-M5	4	M5×P0.8	20.1	4	15	10	2	10	2
PC-04-M6	4	M6×P1.0	20.6	4	15	10	2.5	10	3
PC-06-01	6	PT1/8	21	8	15	12	4	12	4
PC-06-02	6	PT1/4	22.8	10	15	14	4	12	4
PC-06-03	6	PT3/8	20.8	11	15	17	4	12	4
PC-06-04	6	PT1/2	24.8	14	15	21	4	12	4
PC-06-M5	6	M5×P0.8	21	4	15	12	2	12	2
PC-06-M6	6	M6×P1.0	21	4	15	12	2.5	12	3
PC-08-01	8	PT1/8	25.4	8	18	14	5	14	5
PC-08-02	8	PT1/4	24.4	10	18	14	6	14	6
PC-08-03	8	PT3/8	21.4	11	18	17	6	14	6
PC-08-04	8	PT1/2	25.4	14	18	21	6	14	6
PC-10-01	10	PT1/8	29.5	8	22	17	5	17	5
PC-10-02	10	PT1/4	31	10	22	17	6	17	6
PC-10-03	10	PT3/8	28.5	11	22	17	8	17	8
PC-10-04	10	PT1/2	26.8	14	22	21	8	17	8
PC-12-01	12	PT1/8	32	8	22	21	5	20	5
PC-12-02	12	PT1/4	34	10	22	21	6	20	6
PC-12-03	12	PT3/8	31	11	22	21	8	20	8
PC-12-04	12	PT1/2	33.5	14	22	21	8	20	8
PC-16-03	16	PT3/8	37.8	11	24	24	8	24	8
PC-16-04	16	PT1/2	39.8	14	24	24	10	24	10

PUT union tee

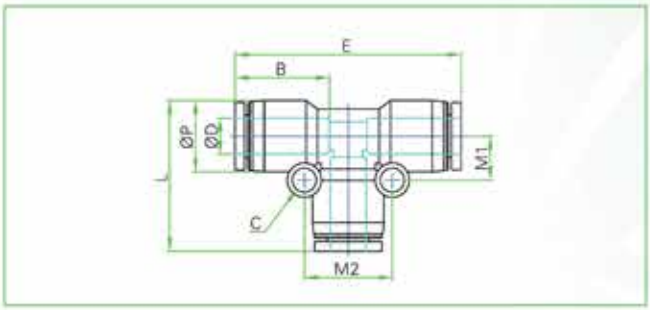

MODEL	ØD	E	L	M1	M2	B	ØP	ORIFICE
PUT-04	4	36.8	24.1	7.2	13.6	15	11	3
PUT-06	6	37.8	25.8	7.8	15.6	15	13	5
PUT-08	8	44.6	29.6	9.1	17.3	18	14.4	6
PUT-10	10	57	37.8	11.8	23.4	22	18.4	8
PUT-12	12	58.6	39.3	14	26.5	22	21	10
PUT-16	16	63.4	44.8	16.5	30.7	24	26	12.5

PL male elbow

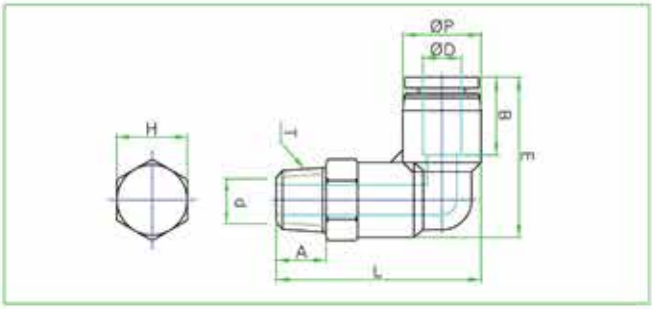

MODEL	ØD	T (Thread)	E	L	A	B	H	ØP	d	ORIFICE
PL-04-01	4	PT1/8	24	29.7	8	15	10	11	6.5	2.5
PL-04-02	4	PT1/4	26.3	32.7	10	15	14	11	8.7	2.5
PL-04-03	4	PT3/8	28	34	11	15	17	11	1.7	2.5
PL-04-M5	4	M5×P0.8	24	26.5	4	15	10	11	2.5	2.5
PL-04-M6	4	M6×P1.0	24	27	4	15	10	11	2.5	2.5
PL-06-01	6	PT1/8	25.2	30.9	8	15	12	13	6.5	2.5
PL-06-02	6	PT1/4	26.9	33.9	10	15	14	13	8.5	4
PL-06-03	6	PT3/8	28.6	35.2	11	15	17	13	11.2	4
PL-06-04	6	PT1/2	30.9	38.7	14	15	21	13	14	4.5
PL-06-M5	6	M5×P0.8	25.2	38.2	4	15	12	13	2.5	2.5
PL-06-M6	6	M6×P1.0	25.2	28.7	5	15	12	13	2.5	2.5
PL-08-01	8	PT1/8	30.5	35.4	8	18	14	14.4	6.8	4
PL-08-02	8	PT1/4	30.5	37.4	10	18	14	14.4	8.2	4
PL-08-03	8	PT3/8	32.2	38.7	11	18	17	14.4	11.9	4
PL-08-04	8	PT1/2	34.5	42.2	14	18	21	14.4	13.9	4
PL-10-01	10	PT1/8	37.4	42	8	22	17	18.4	6.5	6.5
PL-10-02	10	PT1/4	37.4	44	10	22	17	18.4	8.3	6.5
PL-10-03	10	PT3/4	37.4	45	11	22	17	18.4	11.7	6.5
PL-10-04	10	PT1/2	39.7	48.5	14	22	21	18.4	14.3	7.5
PL-12-01	12	PT1/8	40.4	44.5	8	22	19	21	6.5	6.5
PL-12-02	12	PT1/4	40.4	46.5	10	22	19	21	8	6.5
PL-12-03	12	PT3/8	40.4	48.5	11	22	19	21	11.5	7
PL-12-04	12	PT1/2	41.5	51	14	22	21	21	14	7.5
PL-16-03	16	PT3/8	46.2	57.5	11	24	24	26	11	11
PL-16-04	16	PT1/2	46.2	60.5	14	24	24	26	14	14

PY union y

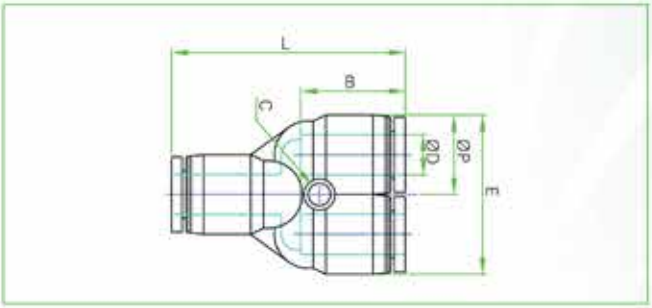

MODEL	ØD	L	E	B	ØP	C	ORIFICE
PY-04	4	35.2	22.2	15	11	3.2	3
PY-06	6	37	26	15	13	3.2	5
PY-08	8	39.4	29.6	18	14.4	3.2	6
PY-10	10	50.2	37.2	22	18.4	4.2	8
PY-12	12	52.6	42.6	22	21	4.2	10
PY-16	16	59.2	51	24	26	5.2	12.5

PWT male Y

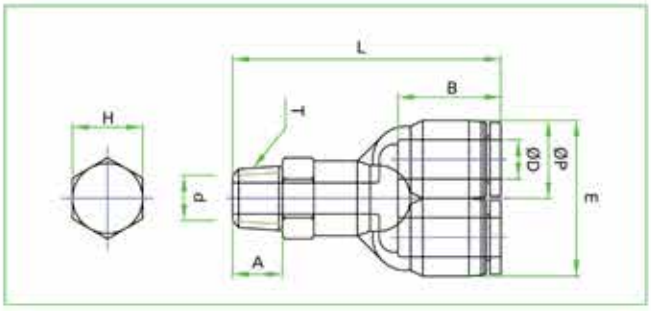

MODEL	ØD	T (Thread)	L	E	A	B	H	ØP	d	ORIFICE
PWT-04-01	4	PT1/8	38.8	22.1	8	15	10	11	6.5	2.5
PWT-04-02	4	PT1/4	41.8	22.1	10	15	14	11	8.7	2.5
PWT-04-03	4	PT3/8	43.1	22.1	11	15	17	11	11.7	2.5
PWT-04-M5	4	M5×P0.8	35.6	22.1	4	15	10	11	2.5	2.5
PWT-04-M6	4	M6×P1.0	36.1	22.1	5	15	10	11	2.5	2.5
PWT-06-01	6	PT1/8	40.1	26	8	15	12	13	6.5	2.5
PWT-06-02	6	PT1/4	43	26	10	15	14	13	8.5	4
PWT-06-03	6	PT3/8	44.3	26	11	15	17	13	11.2	4
PWT-06-04	6	PT1/2	47.8	26	14	15	21	13	14	4.5
PWT-06-M5	6	M5×P0.8	37.3	26	4	15	12	13	2.5	2.5
PWT-06-M6	6	M6×P1.0	37.8	26	5	15	12	13	2.5	2.5
PWT-08-01	8	PT1/8	46.3	29.8	8	18	14	14.4	6.8	4
PWT-08-02	8	PT1/4	48.3	29.8	10	18	14	14.4	8.2	4
PWT-08-03	8	PT3/8	49.6	29.8	11	18	17	14.4	11.9	4
PWT-08-04	8	PT1/2	53.1	29.8	14	18	21	14.4	13.9	4
PWT-10-01	10	PT1/8	55	36.8	8	22	17	18.4	6.5	6.5
PWT-10-02	10	PT1/4	57	36.8	10	22	17	18.4	8.3	6.5
PWT-10-03	10	PT3/4	58	36.8	11	22	17	18.4	11.7	6.5
PWT-10-04	10	PT1/2	61.5	36.8	14	22	21	18.4	14.3	7.5
PWT-12-01	12	PT1/8	58	42.4	8	22	19	21	6.5	6.5
PWT-12-02	12	PT1/4	60	42.4	10	22	19	21	8	6.5
PWT-12-03	12	PT3/8	62	42.4	11	22	19	21	11.5	6.5
PWT-12-04	12	PT1/2	64.5	42.4	14	22	21	21	14	7.5

PUL union elbow

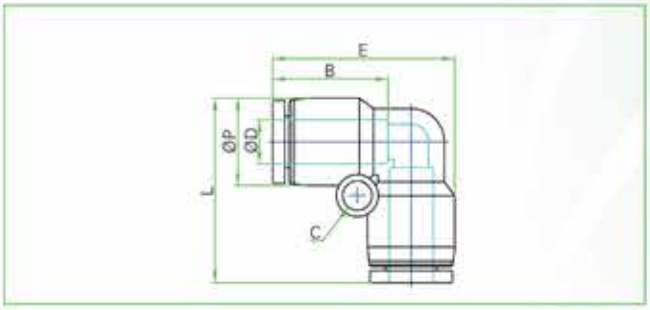

MODEL	ØD	L	B	C	ØP	ORIFICE
PUL-04	4	24	15	3.2	11	3
PUL-06	6	25.5	15	3.2	13	5
PUL-08	8	29.6	18	3.2	14.4	6
PUL-10	10	36.7	22	4.2	18.4	8
PUL-12	12	39.8	22	4.2	21	10
PUL-16	16	45	24	5.2	26	12.5

PT male branch tee

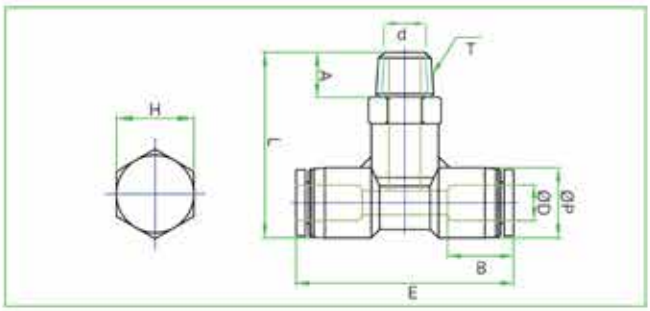

MODEL	ØD	T (Thread)	E	L	A	B	H	ØP	d	ORIFICE
PT-04-01	4	PT1/8	29.7	36.6	8	15	10	11	6.5	2.5
PT-04-02	4	PT1/4	32.7	36.6	10	15	14	11	8.7	2.5
PT-04-03	4	PT3/8	34	36.6	11	15	17	11	11.7	2.5
PT-04-M5	4	M5×P0.8	26.5	36.6	4	15	10	11	2.5	2.5
PT-04-M6	4	M6×P1.0	27	36.6	4	15	10	11	2.5	2.5
PT-06-01	6	PT1/8	30.9	37.8	8	15	12	13	6.5	2.5
PT-06-02	6	PT1/4	33.9	37.8	10	15	14	13	8.5	4
PT-06-03	6	PT3/8	35.2	37.8	11	15	17	13	11.2	4
PT-06-04	6	PT1/2	38.7	37.8	14	15	21	13	14	4.5
PT-06-M5	6	M5×P0.8	28.2	37.8	4	15	12	13	2.5	2.5
PT-06-M6	6	M6×P1.0	28.7	37.8	4	15	12	13	2.5	2.5
PT-08-01	8	PT1/8	35.4	45	8	18	14	14.4	6.8	4
PT-08-02	8	PT1/4	37.4	45	10	18	14	14.4	8.2	4
PT-08-03	8	PT3/8	38.7	45	11	18	17	14.4	11.9	4
PT-08-04	8	PT1/2	42.2	45	14	18	21	14.4	13.9	4
PT-10-01	10	PT1/8	42	55.4	8	22	17	18.4	6.5	6.5
PT-10-02	10	PT1/4	44	55.4	10	22	17	18.4	8.3	6.5
PT-10-03	10	PT3/8	45	55.4	11	22	17	18.4	11.7	6.5
PT-10-04	10	PT1/2	48.5	55.4	14	22	21	18.4	14.3	7.5
PT-12-01	12	PT1/8	44.5	59	8	22	19	21	6.5	6.5
PT-12-02	12	PT1/4	46.5	59	10	22	19	21	8	6.5
PT-12-03	12	PT3/8	48.5	59	11	22	19	21	11.5	6.5
PT-12-04	12	PT1/2	51	59	14	22	21	21	14	6.5
PT-16-03	16	PT3/8	57.5	65	11	24	24	26	11	11
PT-16-04	16	PT1/2	60.5	65	14	24	24	26	14	14

PG reducer

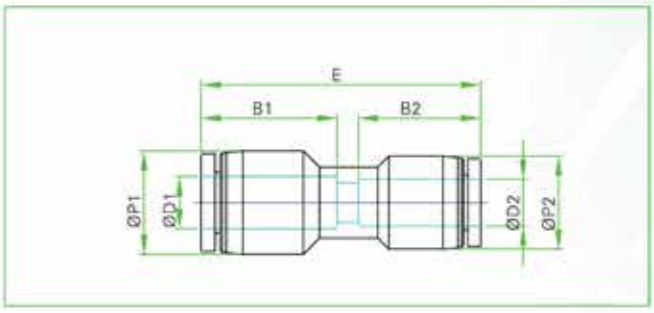

MODEL	ØD1	ØD2	E	B1	B2	ORIFICE
PG-0604	4	6	35.2	15	15	3.3
PG-0806	6	8	36.7	15	15	4
PG-1008	8	10	43.4	18	22	5
PG-1210	10	12	45.4	22	22	7
PG-1612	12	16	48.4	22	24	8

PST male run tee

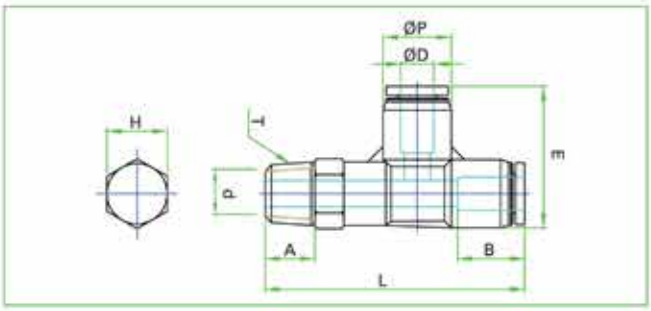

MODEL	ØD	T (Thread)	L	E	A	B	H	ØP	d	ORIFICE
PST-04-01	4	PT1/8	38.8	24	8	15	10	11	6.5	2.5
PST-04-02	4	PT1/4	41.8	26.3	10	15	14	11	8.7	2.5
PST-04-03	4	PT3/8	43.1	28	11	15	17	11	11.7	2.5
PST-04-M5	4	M5×P0.8	35.6	24	4	15	10	11	2.5	2.5
PST-04-M6	4	M6×P1.0	36.1	24	5	15	10	11	2.5	2.5
PST-06-01	6	PT1/8	40.1	25.2	8	15	12	13	6.5	2.5
PST-06-02	6	PT1/4	43	26.9	10	15	14	13	8.5	4
PST-06-03	6	PT3/8	44.3	28.6	11	15	17	13	11.2	4
PST-06-04	6	PT1/2	47.8	30.9	14	15	21	13	14	4.5
PST-06-M5	6	M5×P0.8	37.3	25.2	4	15	12	13	2.5	2.5
PST-06-M6	6	M6×P1.0	37.8	25.2	5	15	12	13	2.5	2.5
PST-08-01	8	PT1/8	46.3	30.5	8	18	14	14.4	6.8	4
PST-08-02	8	PT1/4	48.3	30.5	10	18	14	14.4	8.2	4
PST-08-03	8	PT3/8	49.6	32.2	11	18	17	14.4	11.9	4
PST-08-04	8	PT1/2	53.1	34.5	14	18	21	14.4	13.9	4
PST-10-01	10	PT1/8	55	37.4	8	22	17	18.4	6.5	6.5
PST-10-02	10	PT1/4	57	37.4	10	22	17	18.4	8.3	6.5
PST-10-03	10	PT3/4	58	37.4	11	22	17	18.4	11.7	6.5
PST-10-04	10	PT1/2	61.5	39.7	14	22	21	18.4	14.3	7.5
PST-12-01	12	PT1/8	58	40.4	8	22	19	21	6.5	6.5
PST-12-02	12	PT1/4	60	40.4	10	22	19	21	8	6.5
PST-12-03	12	PT3/8	62	40.4	11	22	19	21	11.5	6.5
PST-12-04	12	PT1/2	64.5	41.5	14	22	21	21	14	6.5

PUC union straight

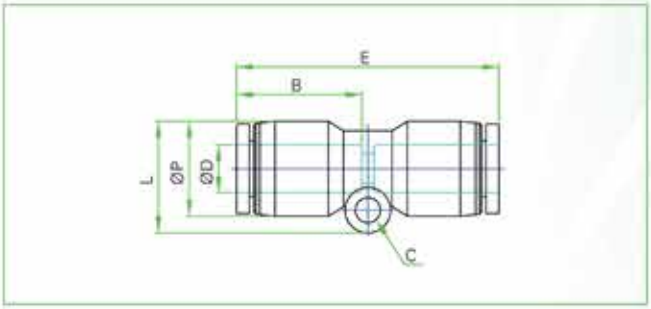

MODEL	ØD	E	C	B	ØP	ORIFICE
PUC-04	4	32.6	3.2	15	11	3
PUC-06	6	35	3.2	15	13	5
PUC-08	8	36.5	3.2	18	14.4	6
PUC-10	10	47.6	4.2	22	18.4	8
PUC-12	12	48.8	4.2	22	21	10
PUC-16	16	64.8	5.2	24	26	13

PMM bucklehead union

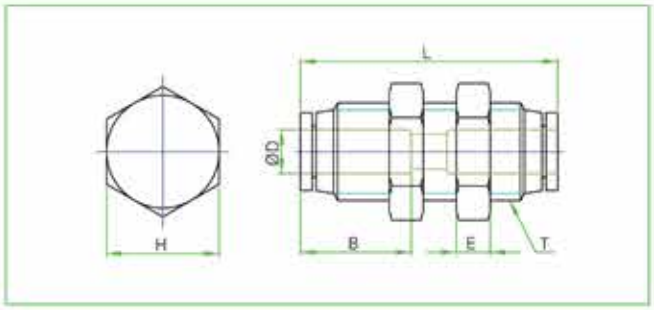

MODEL	ØD	T	L	H	B	ORIFICE
PMM-04	4	M12×P1.0	30	14	15	3
PMM-06	6	M14×P1.0	31.5	17	15	5
PMM-08	8	M16×P1.0	34.5	19	18	6
PMM-10	10	M20×P1.0	41	24	22	8
PMM-12	12	M22×P1.0	44.8	27	22	10

PCF female straight

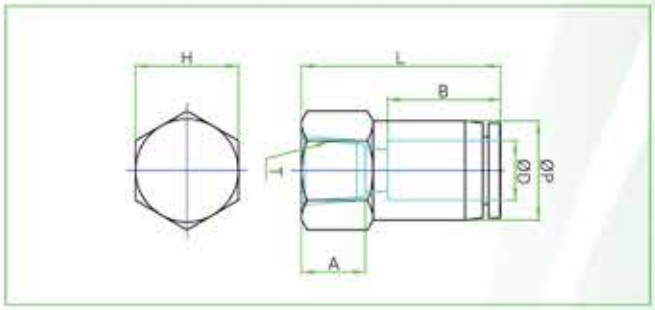

MODEL	ØD	T	L	A	B	H	ØP	ORIFICE
PCF-04-01	4	PT1/8	24	8	15	14	10	3
PCF-04-02	4	PT1/4	26.2	10	15	17	10	3
PCF-04-03	4	PT3/8	27.3	11	15	21	10	3
PCF-06-01	6	PT1/8	24.8	8	15	14	12	4.5
PCF-06-02	6	PT1/4	24	10	15	17	12	4.5
PCF-06-03	6	PT3/8	28.4	11	15	21	12	4.5
PCF-08-01	8	PT1/8	28	8	18	14	14	5.8
PCF-08-02	8	PT1/4	28.2	10	18	17	14	8
PCF-08-03	8	PT3/8	29.8	11	18	21	14	8
PCF-08-04	8	PT1/2	31.7	14	18	24	14	8
PCF-10-01	10	PT1/8	28.8	8	22	17	17	8
PCF-10-02	10	PT1/4	32.4	10	22	17	17	8
PCF-10-03	10	PT3/8	33.2	11	22	21	17	8
PCF-10-04	10	PT1/2	35	14	22	24	17	8
PCF-12-02	12	PT1/4	33.5	10	22	21	20	10
PCF-12-03	12	PT3/8	34.5	11	22	21	20	10
PCF-12-04	12	PT1/2	36	14	22	24	20	10

PW reducer Y

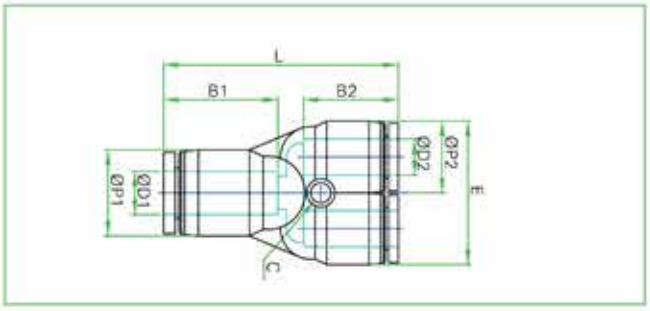

MODEL	ØD1	ØD2	ØP1	L	E	C	B1	B2	ØORIFICE
PW-3/16-5/32	3/16	5/32	13	36.5	22.2	3.2	15	15	3.3
PW-1/4-5/32	1/4	5/32	13	36.5	22.2	3.2	15	15	3.3
PW-1/4-3/16	1/4	3/16	14.4	37.	26	3.2	15	15	4.0
PW-5/16-5/32	5/16	5/32	14.4	37.9	22.2	3.2	18	15	3.7
PW5/16-1/4	5/16	1/4	14.4	40	26	3.3	18	15	5.0
PW-3/8-1/4	3/8	1/4	18.4	42	26	3.2	22	15	5.0
PW-3/8-5/16	3/8	5/16	18.4	44.1	29.6	4.2	22	18	7.0
PW-1/2-5/16	1/2	5/16	21	50	29.6	3.2	22	18	6.4
PW-1/2-3/8	1/2	3/8	21	52.2	37.2	4.2	22	22	7.0

SC elbow

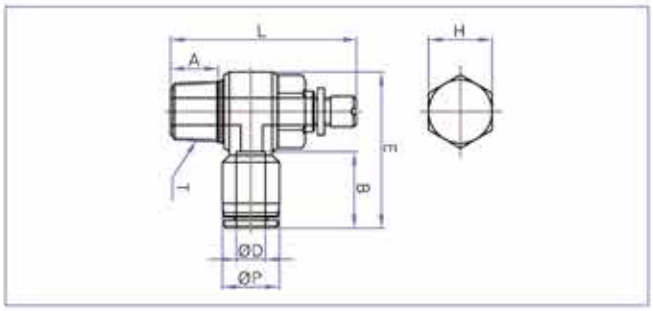

MODEL	ØD	T (Thread)	E	L MIN	L MAX	A	B	H	ØP
SC04-M5	4	M5*P0.8	26.1	29.5	31	4	15	8	11
SC04-01	4	PT1/8	28.7	35.4	41.3	9	15	12	11
SC04-02	4	PT1/4	33.1	42.6	47.5	11.6	15	14	11
SC06-M5	6	M5*P0.8	26.4	29.5	31	4	15	8	13
SC06-01	6	PT1/8	29.1	35.4	41.3	9	15	12	13
SC06-02	6	PT1/4	34	42.6	47.5	11.6	15	14	13
S006-03	6	PT3/8	39.6	48	53	12.5	15	19	13
SC08-01	8	PT1/8	32.4	35.4	41.3	9	18	12	14.4
SC08-02	8	PT1/4	37.3	42.6	47.5	11.6	18	14	14.4
SC08-03	8	PT3/8	40	48	53	12.5	18	19	14.4
SC08-04	8	PT1/2	46.6	53.5	61	15.6	18	24	14.4
SC10-01	10	PT1/8	37	35.4	41.3	9	22	12	18.4
SC10-02	10	PT1/4	41	42.6	47.5	11.6	22	14	18.4
SC10-03	10	PT3/8	43.3	46	53	12.5	22	19	18.4
SC10-04	10	PT1/2	49	53.5	61	15.6	22	24	18.4
SC12-02	12	PT1/4	42	42.6	47.5	11.6	22	14	21
SC12-03	12	PT3/8	45.9	48	53	12.5	22	19	21
SC12-04	12	PT1/2	49	53.5	61	16.6	22	24	21

SCF union straight

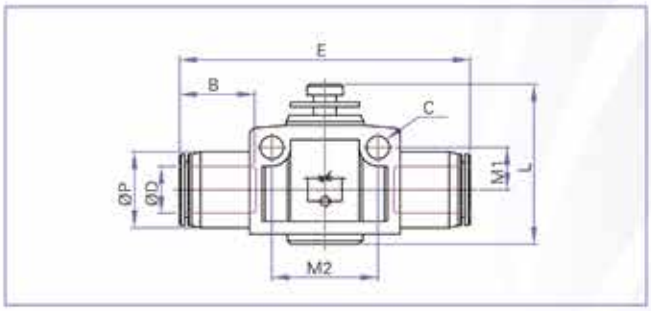

MODEL	ØD	L MIN	L MAX	E	M2	ØP	B	C
SCF-04	4	26	29	40	14	11	15	3.2
SCF-06	6	38	44	47	20.5	13	15	4.2
SCF-08	8	42.8	47.8	52	22	14.4	18	4.2
SCF-10	10	48.2	53.2	62.8	26	18.4	22	4.2
SCF-12	12	49.5	57	74	32	21	22	4.2

HR02DXS SERIES

MODEL	SELANG I.D (mm)	BEBAN KERJA MAKSIMUM	BURSTING PRESSURE	PANJANG SELANG (CM)	TIPE SELANG	FITTING THREAD SIZE	WEIGHT
HR02-UB6530	6.5 mm (1/4")	15/200	60/800	110 cm	Pu Braid	1/4+1/4	7.5 kgs
HR02-UB6540	6.5 mm (1/4")	15/200	60/800	110 cm	Pu Braid	1/4+1/4	8.3 kgs
HR02-UB6550	6.5 mm (1/4")	15/200	60/800	110 cm	Pu Braid	1/4+1/4	9 kgs
HR02-UB8030	8.0 mm (5/16")	15/200	60/800	110 cm	Pu Braid	1/4+1/4	8kgs
HR02-UB8040	8.0 mm (5/16")	15/200	60/800	110 cm	Pu Braid	1/4+1/4	9 kgs
HR02-UB1020	10 mm	15/200	60/800	110 cm	Pu Braid	1/8+1/8	8 kgs
HR02-UB1030	10 mm	15/200	60/800	110 cm	Pu Braid	1/8+1/8	9 kgs

WARNA STANDAR CASING	BK. Hitam
WARNA STANDAR SELANG	R. Merah
UKURAN SELANG (I.D.XO.D.)	6.5 mm x 10 mm / 8.0 mm x 12 mm / 10 mm x 15 mm
DIMENSI KEMASAN (1PCS)	34 cm x 28 cm x 37 cm
CONTAINER PACK	8000 pcs / 20 ft
FITTING THREAD	BSPT / NPT

HR01 SERIES

MODEL	SELANG I.D (mm)	TEKANAN MAKSIMUM BERKERJA	BURSTING PRESSURE	PANJANG SELANG (INLET)	PANJANG SELANG (OUTLET)	TIPE SELANG	FITTING THREAD SIZE	BERAT
HR01-U5075	5.0 mm (1/4")	8 Bar	24 Bar	-	7.5 m	Pu	1/4+1/4	1.4 kgs
HR01-UB5075	5.0 mm (1/4")	15 Bar	45 Bar	-	7.5 m	Pu Braid	1/4+1/4	1.4 kgs
HR01-UB6560	6.5 mm (1/4")	8 Bar	24 Bar	-	6 m	Pu	1/4+1/4	1.4 kgs
HR01-UB6560	6.5 mm (5/16")	15 Bar	45 Bar	-	6 m	Pu Braid	1/4+1/4	1.4 kgs

WARNA STANDAR CASING	Y. KUNING
WARNA STANDAR SELANG	OR. JINGGA
UKURANG SELANG (I.D X O.D.)	5.0 MM X 8.0 MM / 6.5 MM X 10 MM
DIMENSI KEMASAN (1PCS)	24 CM X 21. 5 CM X 9.5 CM
CONTAINER PACK	5000 PCS / 20 FT
FITTING THREAD	BSPT/NPT

SHPI

TRIED. TESTED.
AND
WANTED.

SHPI

note:

Shan Hua Plastic Industrial